REVISIONS			
REV	DESCRIPTION	DATE	APPROVED
-	-	-	-

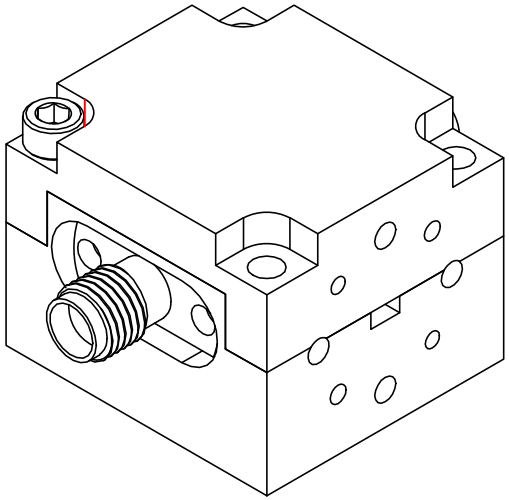

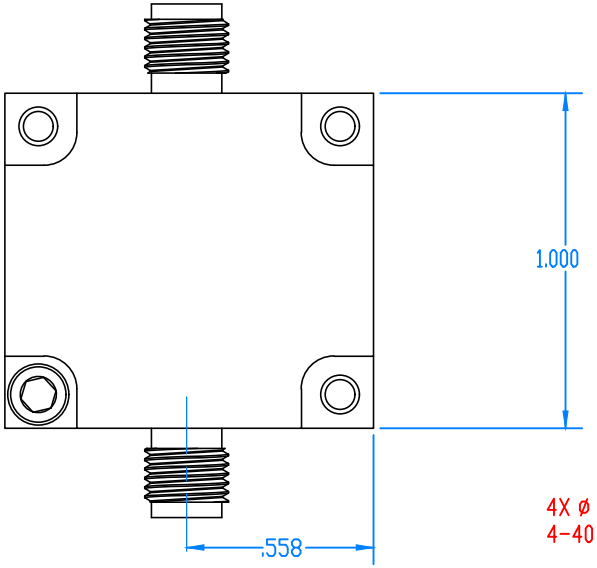

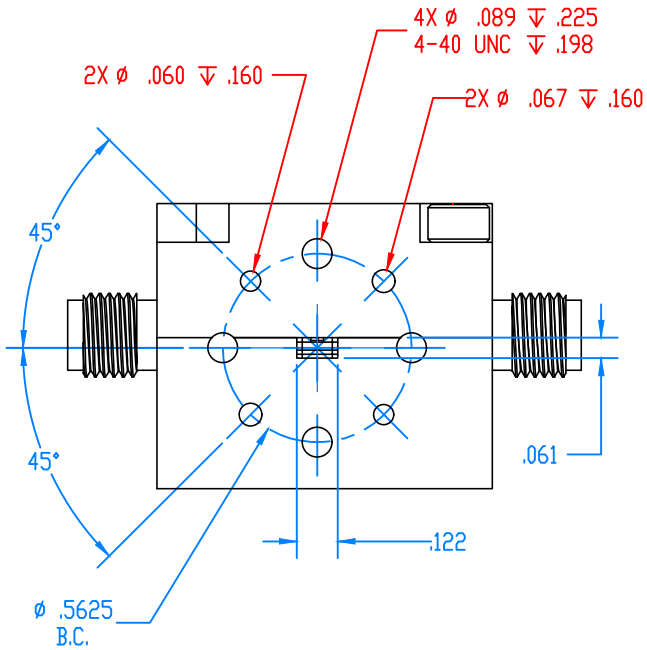

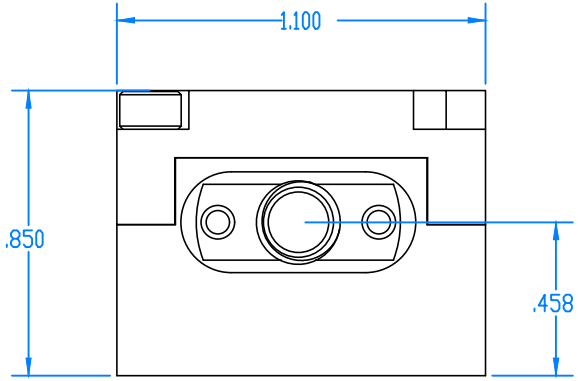

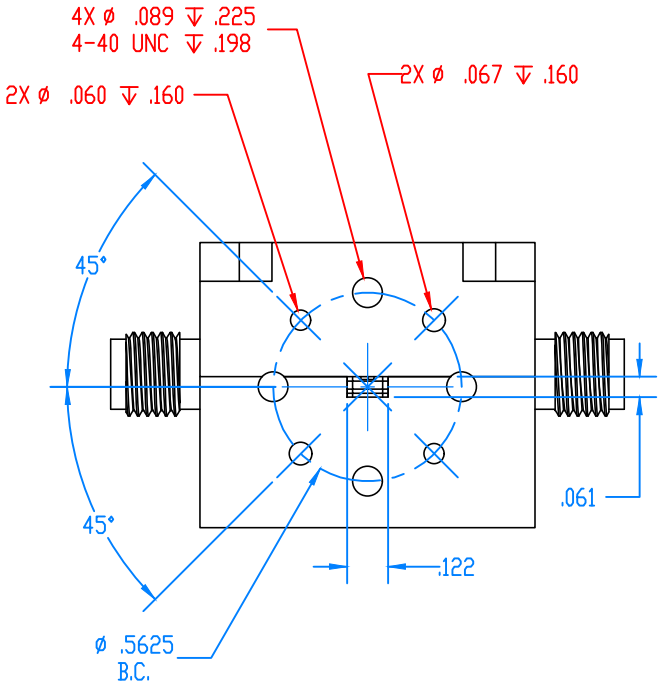

DECIMALS: XXXX ±.0005 XXX ±.005 XX ±.01		NAME	DATE
ANGLES: ± .5 DEGRESS	DRAWN	CC	5-5-21
THIRD ANGLE PROJECTION	CHECKED	LS	5-5-21
	ENG	LS	5-5-21
	MATL: 6061 T6 ALUMINUM		

TITLE: Millimeter Wave Products Inc.

SIZE B | DWG. NO. 971E_OUTLINE_25967 | REV -

SCALE: 5:2 | WEIGHT: | SHEET 1 OF 1