REVISIONS			
REV	DESCRIPTION	DATE	APPROVED
-	-	-	-

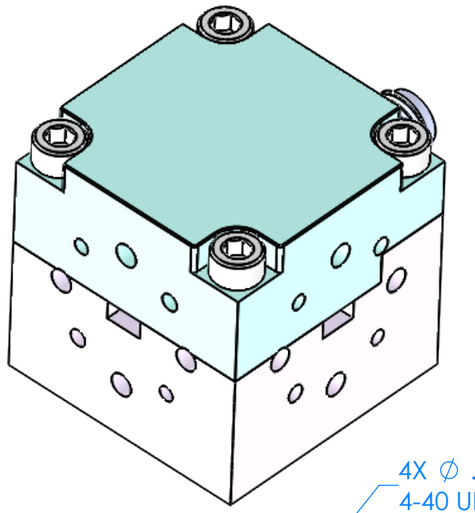

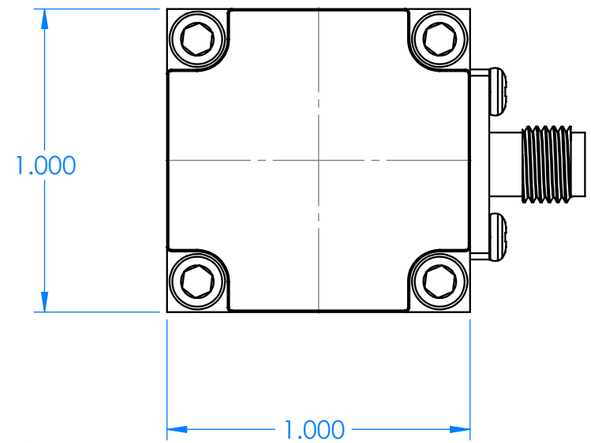

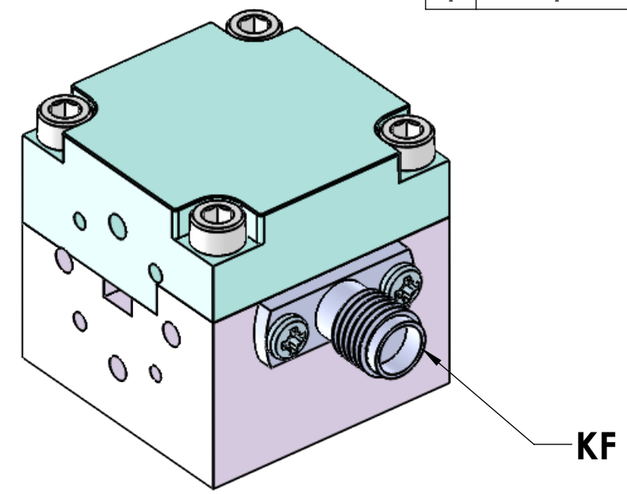

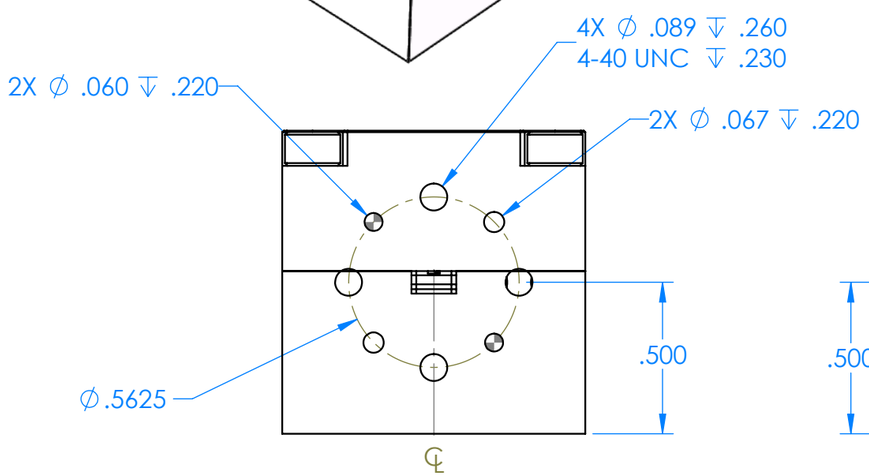

385 FLANGE

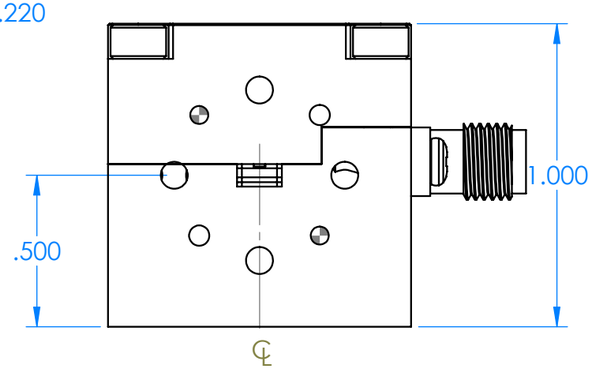

385 FLANGE

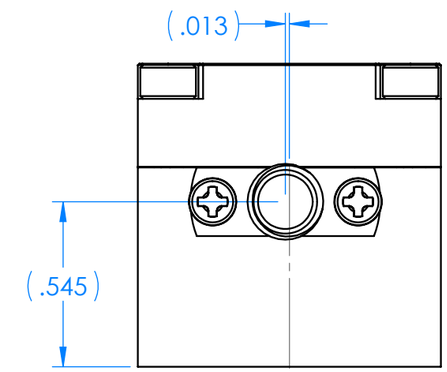

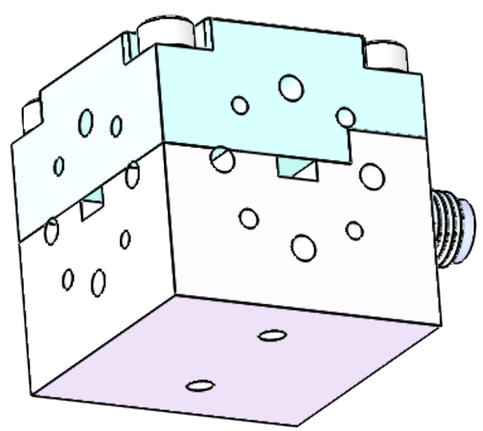

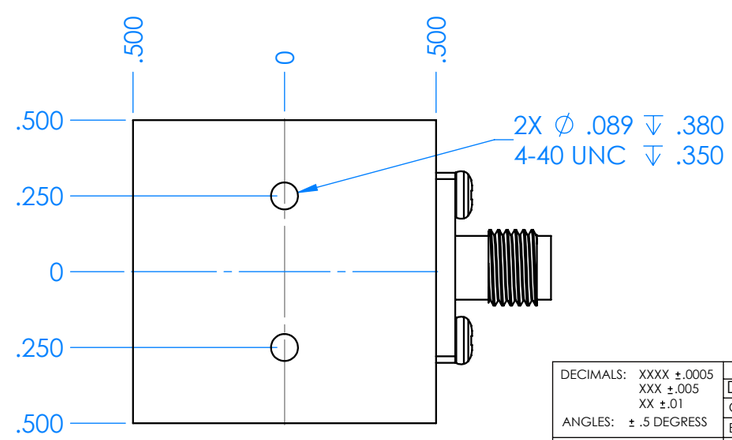

		NAME	DATE
DECIMALS: XXXX ±.0005 XXX ±.005 XX ±.01	DRAWN	JV	1-16-20
ANGLES: ± .5 DEGRESS	CHECKED	LS	1-16-20
	ENG	LS	1-16-20
THIRD ANGLE PROJECTION	MATL: 6061 T6 ALUMINUM		

TITLE: Millimeter Wave Products Inc.

SIZE: B | DWG. NO. 970-980V-385_INLINE_OUTLINE | REV -

SCALE: 2:1 | WEIGHT: | SHEET 1 OF 1