| REVISIONS | | | |
|---|---|---|---|
| REV | DESCRIPTION | DATE | APPROVED |
| -- | -- | -- | -- |

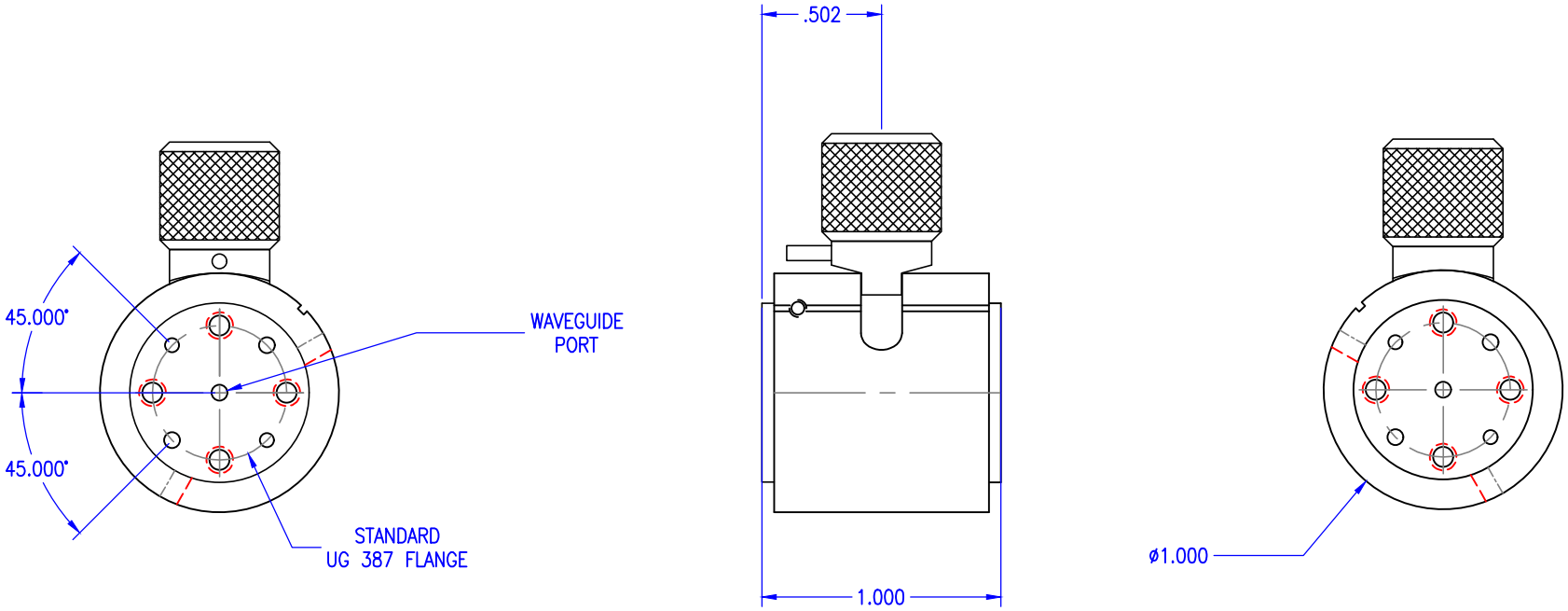


| CIRCULAR WAVEGUIDE PORT INNER DIAMETER |
|---|
| 0.059 |
| 0.067 |

| -- | -- | MATERIAL: BLACK DELRIN | -- |
|---|---|---|---|
| QTY | PART NUMBER | DESCRIPTION | ITEM |

UNLESS OTHERWISE SPECIFIED
ALL SURFACES 32

DIMENSIONS ARE IN INCHES
TOLERANCES ARE:
DECIMALS: .1234 +/- .0005
.123 +/- .005
.12 +/- .01
ANGLES: +/- .5 DEGREES
ALL THREADS TO BE 2A OR 2B

REF DWG# 12371

THIRD ANGLE PROJECTION

DRAFTING: C.C.
APPROVED: M.S.
DATE: 11/24/2020

SHEET NO. 1 OF 1

Mi-Wave Millimeter Products Inc.

TITLE
283G-387
OUTILNE

SIZE A

DWG NO 25703